CHLORIDE

by signify

INSTALLATION INSTRUCTIONS FOR RED AND GREEN UNIVERSAL LED EXIT SIGN AND EMERGENCY LIGHT COMBINATION

IMPORTANT SAFEGUARDS
READ AND FOLLOW ALL SAFETY INSTRUCTIONS

1. Review the diagrams thoroughly before beginning.
2. All electrical connections must be in accordance with local codes, ordinances, and the National Electric code.
3. Disconnect power at fuse or circuit breaker before installing or servicing.
4. Do not use outdoors.
5. Do not mount in hazardous locations, or near gas or electric heaters.
6. Do not let power cords touch hot surface.
7. Equipment should be mounted in locations and at heights where it will not be subjected to tampering by unauthorized personnel.
8. The use of accessory equipment not recommend by the manufacturer may cause an unsafe condition.
9. Do not use this equipment for other than intended use.
10. All servicing should be performed by a qualified personnel only.
11. Allow battery to charge for 24 hours before first use.
12. Battery have to recharge if product keep in stock over 9 months, detail manual refer "BATTERY STOCK AND RECHARGE GUIDELINE".

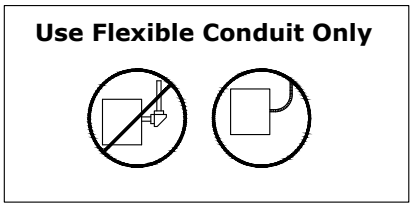

SAVE THESE INSTRUCTIONS

Assembly Lamp Heads

1. Open front cover by flat screwdriver.
2. Snap lamp head on the 2 corners of frame. if unit is ceiling mount or side mount, lamp head can assemble backward.
3. Attach 2 pcs lamp heads male and female connector together.

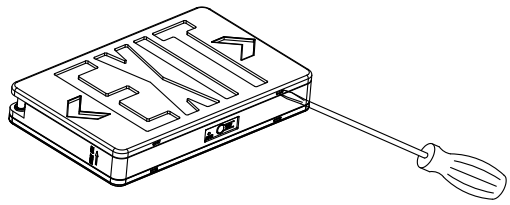

Fig 1

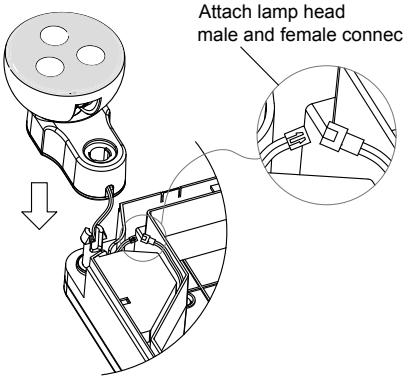

Lamp head forward

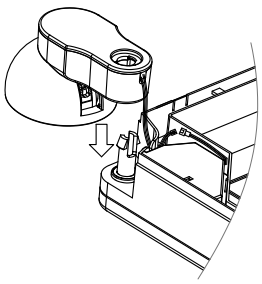

Lamp head backward

RED AND GREEN SIGN CHANGEABLE

The exit sign default setting is red, you can change to green sign as need.

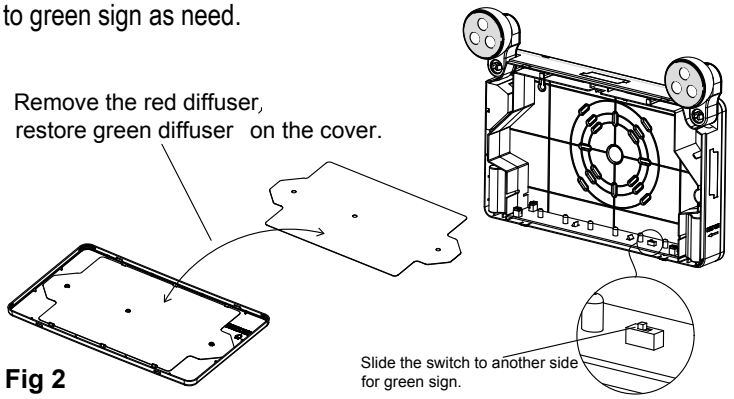

Fig 2

WIRING DIAGRAM

Connect the J-box wires to the power supply wires using the wire nuts provided. Cap the unused lead.

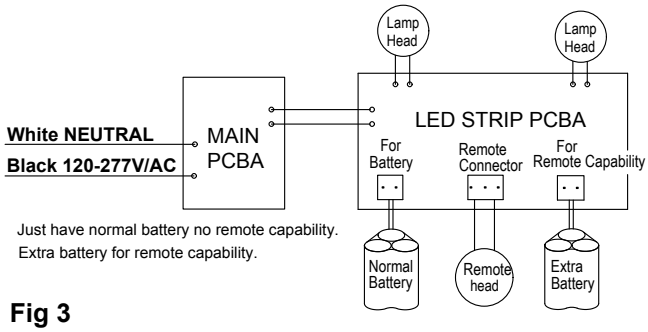

Fig 3

Wall Mounting (see Fig 4)

1. Open front cover and assemble 2pcs lamp heads on the frame.
2. This product default setting is red exit sign, can change to green exit sign per need(see Fig 2).
3. Knock out center and appropriate mounting screw holes on the back plate.
4. Feed AC supply leads through center hole info housing, install fixture on the J-Box by provided screws.
5. Make proper electrical connections according wiring diagram(see Fig 3).
6. Push excess wire into J-Box.
7. Snap chevron to EXIT panel if required.
8. Attach battery connector to PC board, restore front panel on unit, adjust position of lamp heads as need.

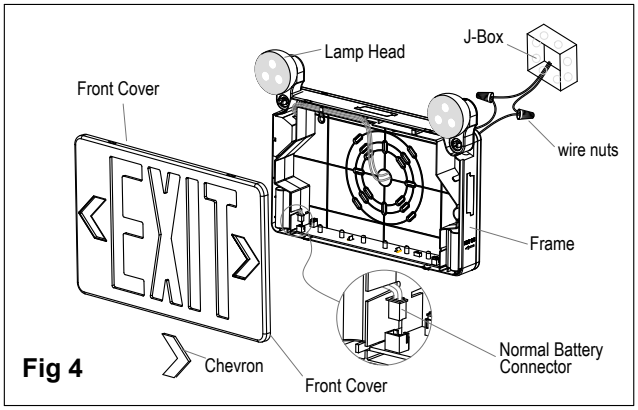

Fig 4

Side or Ceiling Mounting (see Fig 5, Fig 6)

1. Attach crossbar to junction box, set the crossbar so that the longer blade is touching the J-Box.
2. Open front cover and assemble 2 pcs lamp heads on the frame.
3. This product default setting is red exit sign, can change to green exit sign per need(see Fig 2).
4. If double face is desired, replace back plate with additional face plate provided.
5. Remove out the mounting hole cover on the top or side of the unit, assemble the canopy (see Fig 7).
6. Route the proper wires through mounting hole out of housing. install fixture on the J-Box by provided screws.
7. Make electrical connections inside the J-Box as wiring diagram (see Fig 5).
8. Push excess wire into J-Box.
9. Snap chevron to EXIT panel if required.
10. Attach battery connector to PC board, restore front panel on unit, adjust position of lamp heads as need.

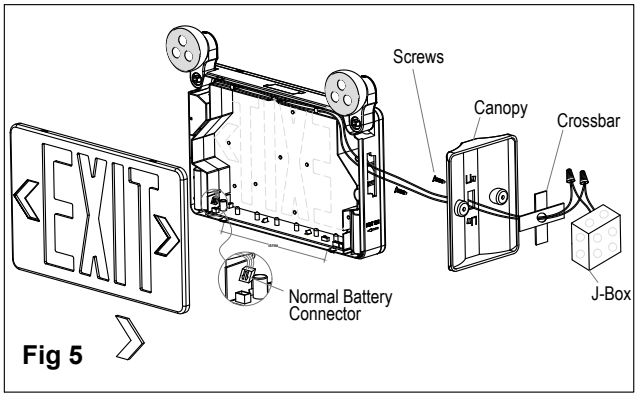

Fig 5

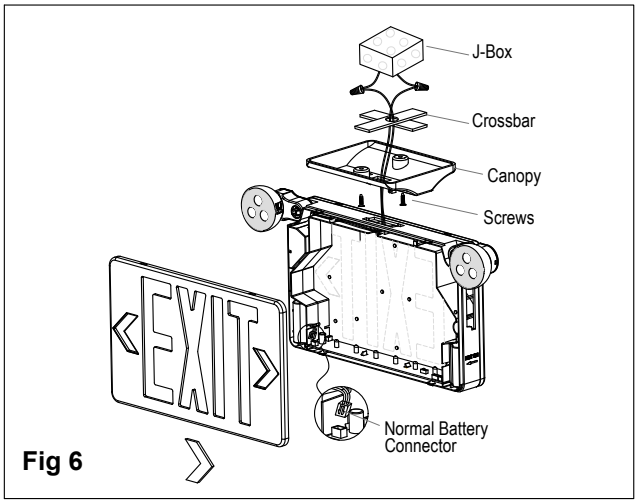

Fig 6

Fig 7 **Canopy assembly**

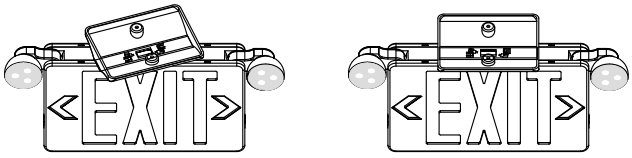

Insert canopy into housing at 20 degree angle and twist. Quick snap is now locked firmly.

CAUTION: Trying to remove canopy after it is locked in place may cause damage.

Connecting Remote heads (see Fig 8)

Using normal battery, no remote capability.
Using extra battery with remote capability.
Connect remote heads extension wire to remote wire, yellow is positive(+), purple is negative(-). connect wires using wire nuts.

Remote capability reference below:
VLLCS2R has max. 3.6V 2W remote capabilities.

Max.mounting height

VLLCS:14ft
VLLCS2R:14ft

Fig 8

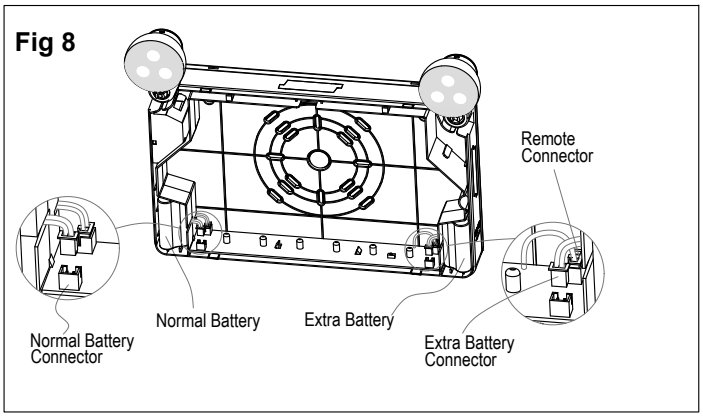

Signify North America Corporation
400 Crossing Blvd, Suite 600
Bridgewater, NJ 08807, USA
Tel. 800-555-0050
www.chloride-lighting.com

© 2026 Signify Holding. All rights reserved. This document contains information relating to the product portfolio of Signify which information may be subject to change. No representation or warranty as to the accuracy or completeness of the information included herein is given and any liability for any action in reliance thereon is disclaimed. The information presented in this document is not intended as any commercial offer and does not form part of any quotation or contract. All trademarks are owned by Signify Holding or their respective owners.